EARTH SCIENCES
SCIENTIFIC BACKGROUND ASSESSMENT

Exercise 3

(For secondary subject)

1) Coriolis force on an airplane

An airplane is flying northward from Marseille to Paris. When it is flying at $45^o N$ of latitude it has a northward speed of $\mathbf{V} = 1000\ km/h$. Knowing that the Coriolis acceleration - in a reference frame rotating with speed $\mathbf{\Omega}$ - is given by the formula

$$a_c = 2\mathbf{\Omega} \times \mathbf{V},$$

compute

1.1) the Coriolis acceleration acting on the airplane. What is its direction?

1.2) the "bank" angle α (see picture) of the airplane that is needed in order to counterbalance the Coriolis effect and keep a straight route.

Hint: consider that, in order to keep a constant altitude, the airplane wings produce a lift that counterbalances the gravity force. The angular speed of rotation of the Earth is approximatively equal to $7.27\ 10^{-5}\ rad/s$.

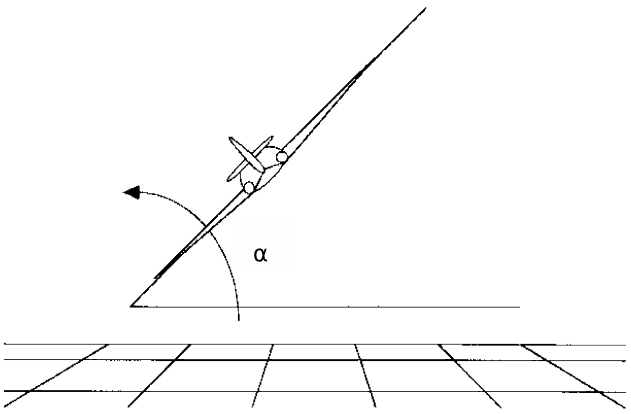

Figure 1: Bank angle of an airplane

2) Obliquity of the Earth axis and solar radiation flux

The Sun emits on average an energy of 3.9 10^{26} Joules per second, and the approximate distance between the Earth and the Sun is $R = 1.496\ 10^{11}$ meters:

2.1) compute the solar constant S_0, i.e. the solar energy flux at the location of the Earth's orbit.

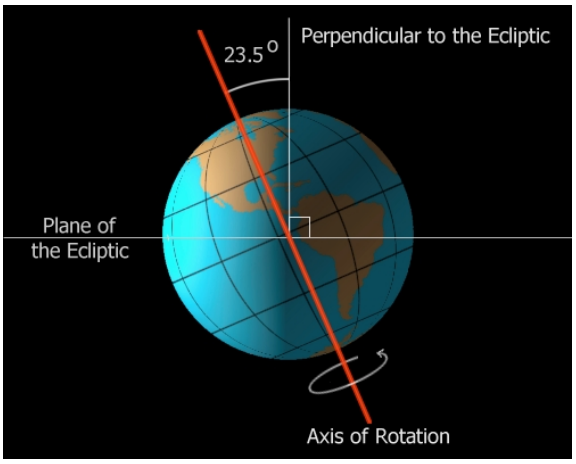

Figure 2: Earth axis obliquity

2.2) The current obliquity of the Earth is 23.5 degrees. Compute the summer and winter solar radiation in Wm^{-2} hitting the Earth surface at a latitude of $45^o N$. Consider the summer and winter solstices, at midday.

2.3) Assuming that the Earth is at blackbody radiative equilibrium, the Earth surface outgoing radiation E is equal to the incoming one from the Sun. Furthermore, one can write the Stephan-Botzmann law as :

$$E = \sigma T^4,$$

where σ is the Stephan's constant ($\sigma = 5.67\ 10^{-8}\ W\ m^{-2}\ {}^\circ K^{-4}$), and T is the surface temperature in degrees Kelvin. Compute the summer and winter temperatures at midday for the same cases as point 2.1.

2.4) Are the above estimates of the surface temperature correct? If not, why?

2.5) The Earth axis oscillates with a periodicity of 41000 years between a minimum angle of 22.1^o and a maximum of 24.5^o, In which of the two cases will the winter-summer temperature difference be larger?

2.6) The changes in the summer-winter difference of radiative flux from the Sun is at the origin of the ice-age cycles of the Earth climate. Comment. What other astrophysical factors influence these changes ?